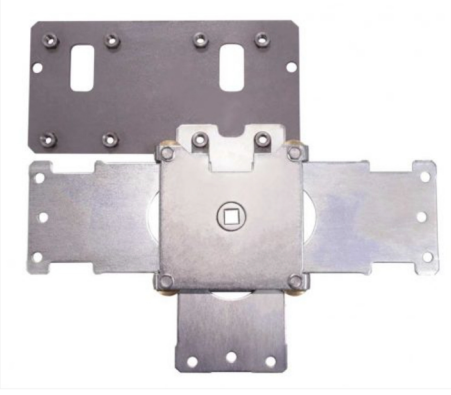

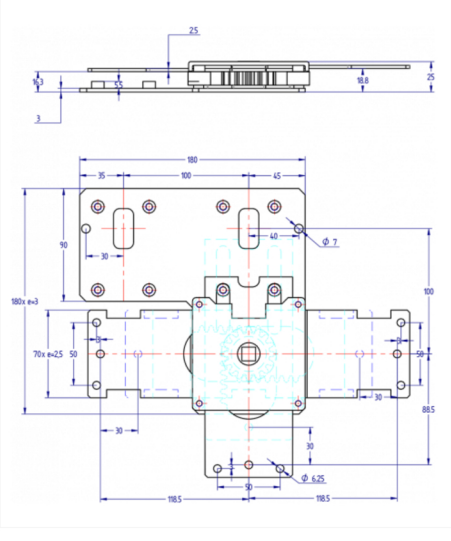

2302-1 2 Locks Operation

3 sided bolt work. Two locks operation with which a bolt throw between 6 to 11mm, block the bolt work shafts.

Ready for mounting standard size locks.
Lock mounting: 4 x 2 x M6 threaded bushes.
Shaft connections: Hole ø 6,25mm.

MATERIAL	STEEL
SHAFTS THROW/OPENING ANGLE	30mm/90º
GEAR WHEEL MATERIAL	ZAMAK
DRIVE NUT	8
FINISH	NO FINISH*
WEIGHT (grs.)	1.400
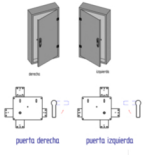
*** The motherboard is not coated. The other parts of the bolt work are supplied zinc plated.**