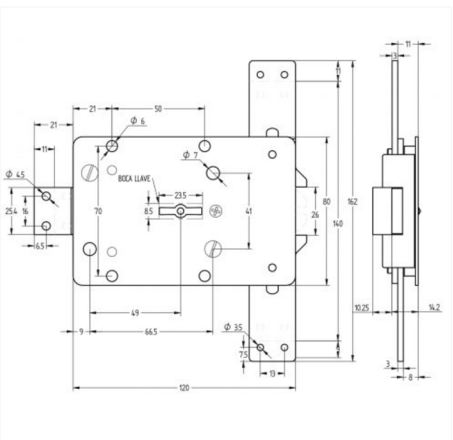

248 Lock Class "A"

Lock under certification EN 1300 Class A with 11mm bolt throw and 3 locking points.

- AGA supplies as a standard the lock with 2 keys AGA-15G.
- Prepared for union with the vault bolt (256, 257).
- Different length of key pins available.

Options which exclude certification:

- Not key retained when in open position.
- Locks keyed alike.
- Masterkeyed.

TYPE OF LOCK	MECHANICAL
LOCK SYSTEM	DRAGGING
N° OF COMBINATIONS	190.000
POSSIBILITY OF MASTERKEY	YES
N° OF TRAINED COMBINATIONS	Check availability
FINISH	NIKEL PLATED
WEIGHT (grs.)	550
CERTIFICATES	VdS (Germany) A2P (France)
N° OF COMBINATIONS	190.000
POSSIBILITY OF MASTERKEY	YES
N° OF TRAINED COMBINATIONS	Check availability
FINISH	NIKEL PLATED
WEIGHT (grs.)	550
CERTIFICATES	VdS (Germany) A2P (France)

INSTALLATION POSITIONS:

Categories: Class "A" High Security Locks, High Security Industry, High security locks